Experiment 5 – Coupler Design.

Dr. H Matzner, S. Levy and D. Ackerman.

June 2009.

Contents

1 Objectives

Upon completion of this study, the student will become familiar with the following topics:

1. Measuring the basic parameters of couplers.
2. Understanding the role of couplers in a receiver.

2 Prelab Exercise

1. For a 20 dB single section edge coupled line directional coupler, constructed as a stripline with ground plane, spacing of $B = 3.2\ mm$, dielectric constant of $\epsilon_r = 4.7$, $T = 0.035\ mm$, $\tan\delta = 0.02$, characteristic impedance of 50 Ω, and center frequency of 1 GHz. Assuming a lossless component and a perfect termination:

   - Write down the S-parameters matrix of the coupler.
   - Calculate its Z_{Oe} and Z_{Oo}.
   - Use ADS LineCalc, set the component type to 'CPWCPL2', and find the dimensions:

W - width of the lines, S - separation of the lines, L - length of the coupled lines.

2. For a 20 dB single section edge coupled line directional coupler, constructed as a microstrip, height of substrate $hs = 1.6\ mm$, dielectric constant of $\epsilon_r = 4.7$, $T = 0.035\ mm$, $\tan\delta = 0.02$, characteristic impedance of 50 Ω, and center frequency of 1 GHz. Assuming a lossless component and a perfect termination:

   - Use ADS LineCalc, set the component type to 'MCLIN', $C\_DB = -20$, $E\_Eff = 90$ deg, and find the dimensions:

W - width of the lines, S - separation of the lines, l - length of the coupled lines (Z_{Oe} and Z_{Oo} remain the same as the previous question).

3. For a 20 dB three sections edge coupled line directional coupler, constructed as a stripline with ground plane, spacing of $B = 3.2\ mm$, dielectric constant of $\epsilon_r = 4.7$, $T = 0.035\ mm$, $\tan\delta = 0.02$, characteristic impedance of 50 Ω, and center frequency of 1 GHz. Assuming a lossless component and a perfect termination:

   - Calculate Z_{oe} and Z_{Oo} of a edge coupled line with a coupling of 20 dB, center frequency 1 GHz and characteristic impedance of 50 Ω, in a stripline with a ground plane.
   - Using ADS LineCalc, find the dimensions:

W - width of the lines, S - separation of the lines, l - length of the coupled lines, for each section.

3 Theoretical Background

A very commonly used basic element in microwave system is the directional coupler. Its basic function is to sample the forward and reverse travelling waves through a transmission line or a waveguide. The common use of this element is to measure the power level of a transmitted or received signal. The model of a directional coupler is shown in Figure 1.

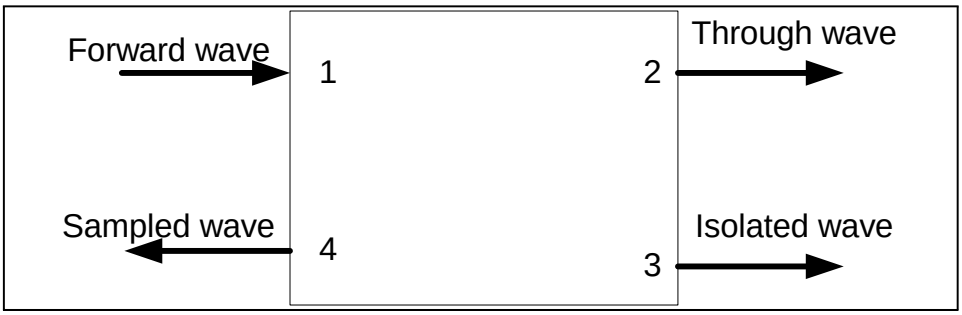

Figure 1 - Directional coupler model.

As seen in the figure, the coupler is a four-ports device. The forward travelling wave goes into port 1 and exit from port 2. A small fraction of it goes out through port 4. In a perfect coupler, no signal appears in port 4. Since the coupler is a lossless passive element, the sum of the signals power at ports 1 and 2 equals to the input signal power. The reverse travelling wave goes into port 2 and out of port 1. A small fraction of it goes out through port 3. In a perfect coupler, no signal appears in port 4.

The directional coupler S-parameters matrix is:

$$S = \begin{pmatrix} 0 & 0 & -j\sqrt{1-k^2} & k \\ 0 & 0 & k & -j\sqrt{1-k^2} \\ -j\sqrt{1-k^2} & k & 0 & 0 \\ k & -j\sqrt{1-k^2} & 0 & 0 \end{pmatrix} \tag{1}$$

Where k is the coupling factor (a linear value).

One popular realization technique of the directional coupler is the coupled-lines directional coupler; two quarter wavelength line are placed close to each other. The wave travelling through one line is coupled to the other line. Such a coupler is shown in Figure 2.

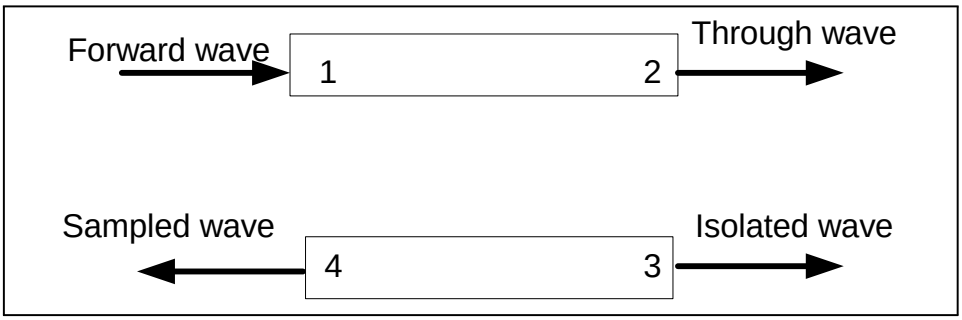

Figure 2 - Coupled lines based directional coupler.

Since there is no ideal coupler available, some of the forward travelling wave is coupled into port 3. This mean that we may think that there is a reverse travelling wave when there isn't. This is very critical in application where the directional coupler is used to measure the return loss of the device. By calculating $20\log(S_{31}/S_{41})$ we can find the return loss of the device connected to port 2. If out coupler has no perfect directivity then out measurement is not accurate.

There are few simple parameters to describe the functionality of a coupler:

- Insertion Loss: $20\log(S_{21})$ or $10\log(1-k^2)$.
- Return Loss: $20\log(S_{11})$.
- Coupling: $20\log(S_{31})$ or $20\log(k)$.
- Directivity: $20\log(S_{31}) - 20\log(S_{41})$.

3.1 Non - Directional Couplers

In some applications, the directivity of the coupler is not important. For instance, if we know there is only forward travelling wave then we may use a non-directional coupler. One possible realization is using a simple resistor divider as shown in Figure 3.

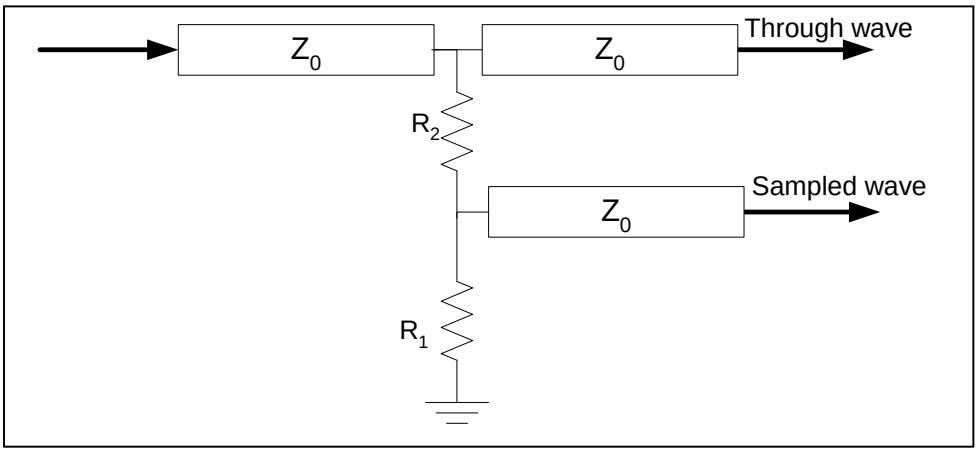

Figure 3 - Resistor divider non-directional coupler.

The transmission lines are not electromagnetically coupled and the coupling equations are derived from the lumped circuit calculation of the resistor divider.

3.2 Coupled Line Directional Coupler

3.2.1 A Single Section Coupler

There are two modes of current flow in an electromagnetic situation. The first is one current flowing down one conductor with a contra-flow current back up the other conductor caused by displacement current coupling between the two conductors. This is termed the 'odd mode' current, and it has an associated odd mode characteristic impedance, styled Z_{0o}.

The other mode is one current flows by displacement current between each center conductor carrying the same polarity, and the ground that is common between them. Hence this is called the 'even mode' current, and it has an associated even mode characteristic impedance, styled Z_{0e}. Figure 4 shows the polarity of the lines of each mode.

For a single section coupler the even and odd mode characteristic impedances are defined as:

$$
\begin{aligned}
Z_{0e} &= Z_0\sqrt{\frac{1+C}{1-C}}, \\
Z_{0o} &= Z_0\sqrt{\frac{1-C}{1+C}}
\end{aligned}
\tag{2}
$$

Where $C < 1$ is the voltage coupling factor of the coupler (a linear value).

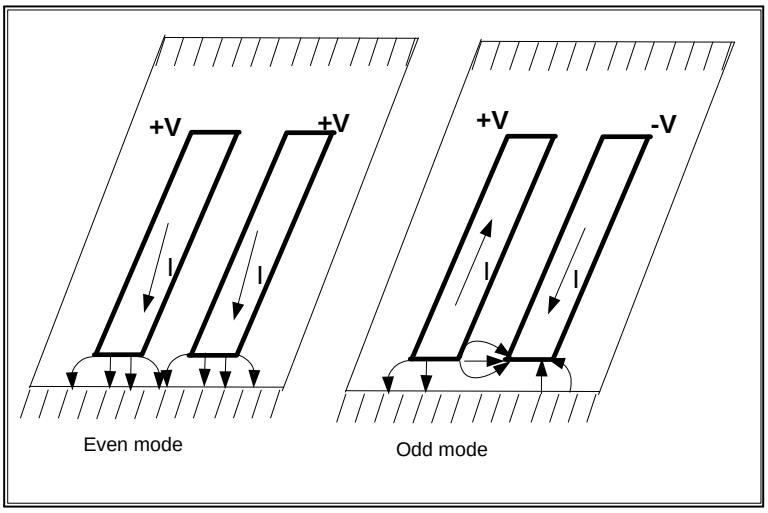

Figure 4 - Even and odd characteristic impedances.

3.2.2 Multi - Sections Coupler

For the case of three sections coupler, the coupling equation is:

$$C = C_1 \sin 3\theta + (C_2 - C_1)\sin\theta \tag{3}$$

Where C_1 is the coupling of the first and third section, while C_2 is the coupling of the second section. In order to solve the coupling equation, one may derive twice equation 3 as:

$$\frac{d^2C}{d\theta^2}\,|_{\theta=\pi/2} = 0$$

and finally find Z_{Oe} and Z_{Oo} for each section using equation 2.

A picture of the dimensions of a stripline coupler is shown in Figure 5.

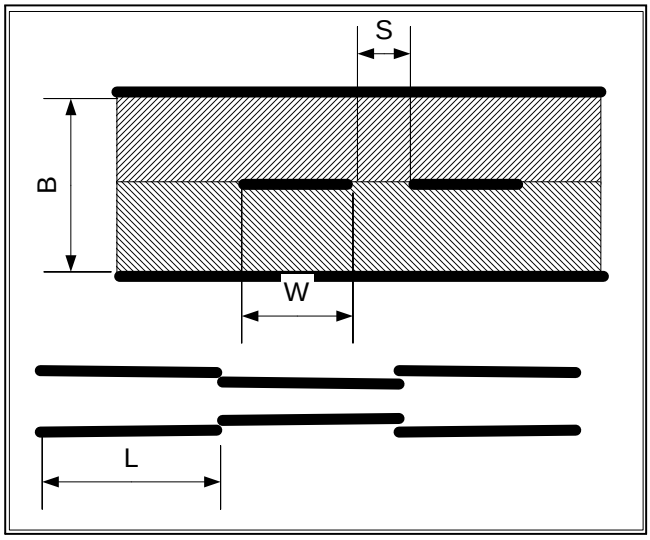

Figure 5 - The dimensions of a stripline coupled line coupler.

A top view of a three sections coupled lines coupler is shown in Figure 6.

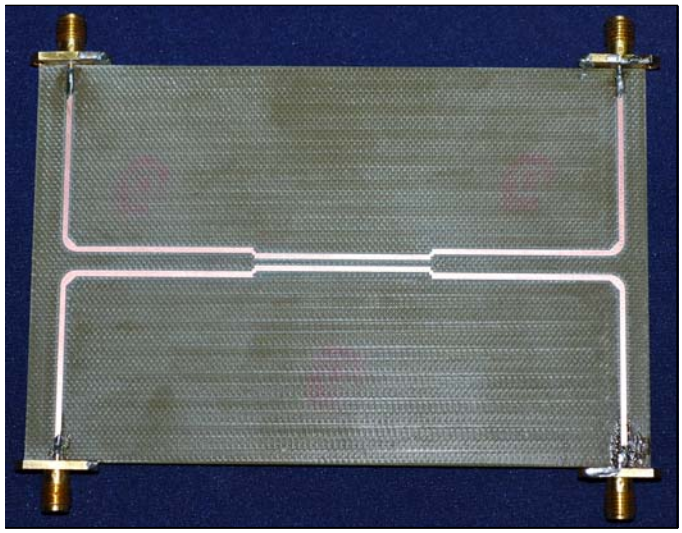

Figure 6 - Top view of a three sections microstrip coupled line coupler.

Because of the symmetry of the structure, all reflection coefficients will be identical as well as several transmission coefficients.

4 Experiment Procedure

4.1 Required Equipment

1. Network analyzer.
2. Type N calibration kit.
3. 50 Ω type N accessory kit.
4. Signal generator.
5. Spectrum analyzer.
6. Power splitter.
7. DC power supply.

4.2 Single Section Half Octave Edge Coupled Line Coupler

4.2.1 ADS Simulation

1. Simulate a single section edge coupled line with the dimensions you found in 'Prelab Exercise' question 1, as shown in Figure 1.

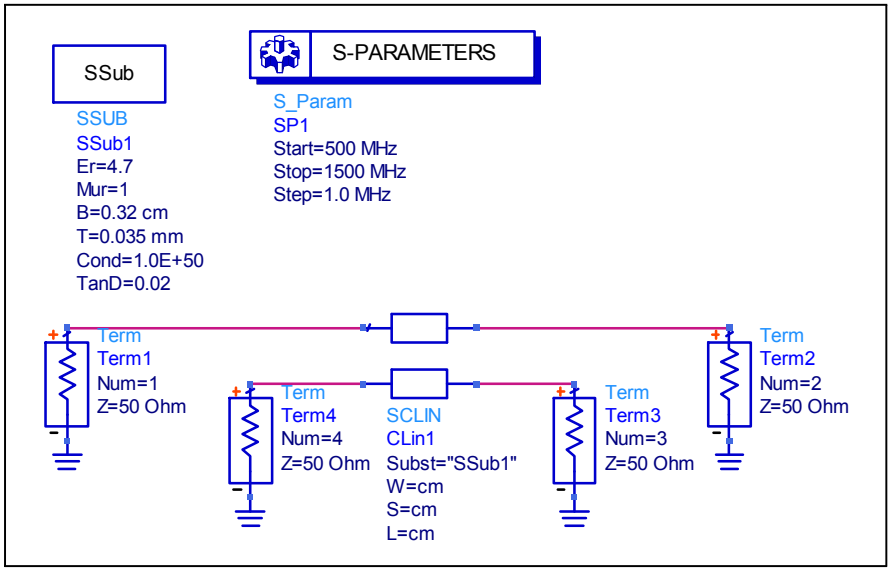

Figure 1 - Single section edge coupled lines coupler.

2. Draw the following graphs:

- Coupling (dB).
- Directivity (dB).
- Insertion Loss (dB).
- VSWR primary and secondary line.
- Frequency sensitivity (of the primary line), frequency range 800 $MHz-$ 1200 MHz. **Save the data.**

4.2.2 CST Simulation of a Microstrip Coupler

1. Choose the "Coupler (Planar, Microstrip, cpw)" template. When this template is used, the background material is defined as vacuum, the units are changed to mm, GHz and $nsec$, and the boundary conditions are set to "electric". Furthermore, the mesh settings are changed to account for the planar structure.

2. Define the parameters, as shown in Table 1.

Name	***Value***	***Description***
xg	L+30	Ground x dimension
yg	S+2*w+30	Ground y dimension
t	0.02	Metal thickness
hs	1.6	Substrate thickness
er	4.7	Permittivity of substrate
w		Width of strip
S		Spacing between the lines
L		Length of coupled lines
Table 1 - Parameters Definition		

For the missing values, use the dimensions you found in 'Prelab Exercise' question 2.

3. Create the substrate break, as shown in Figure 2.

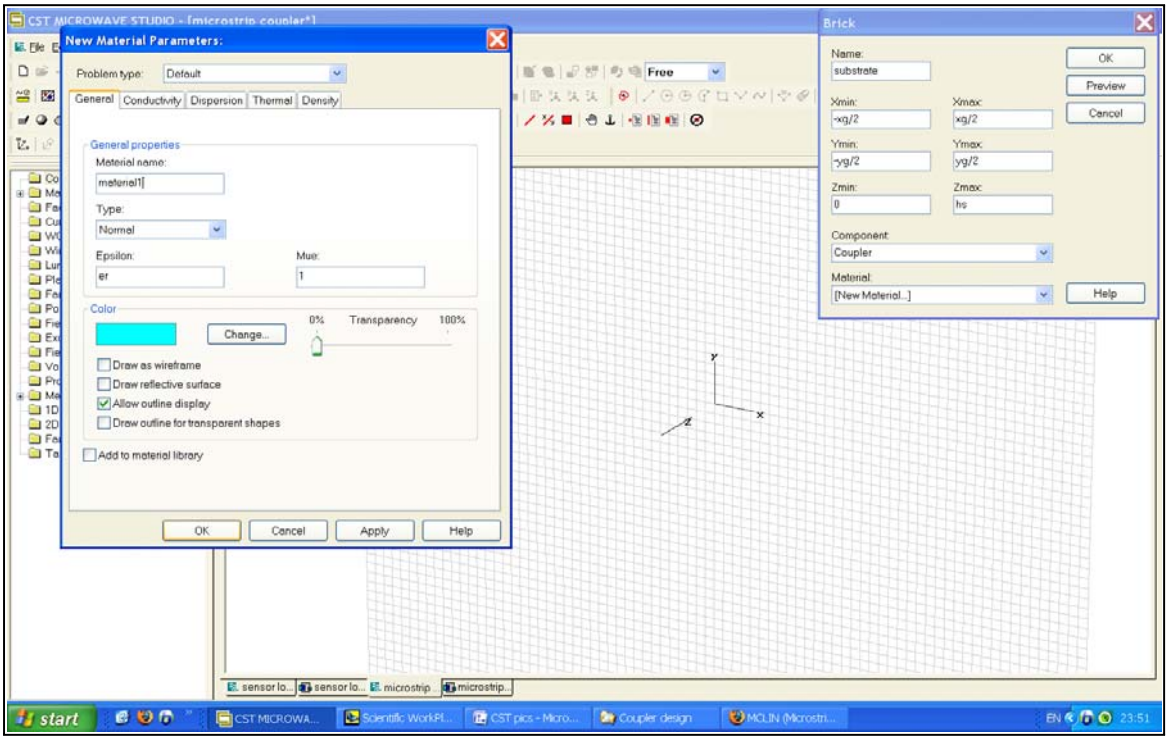

Figure 2 - Building the substrate with a new material.

4. Define the first strip, as shown in Figure 3.

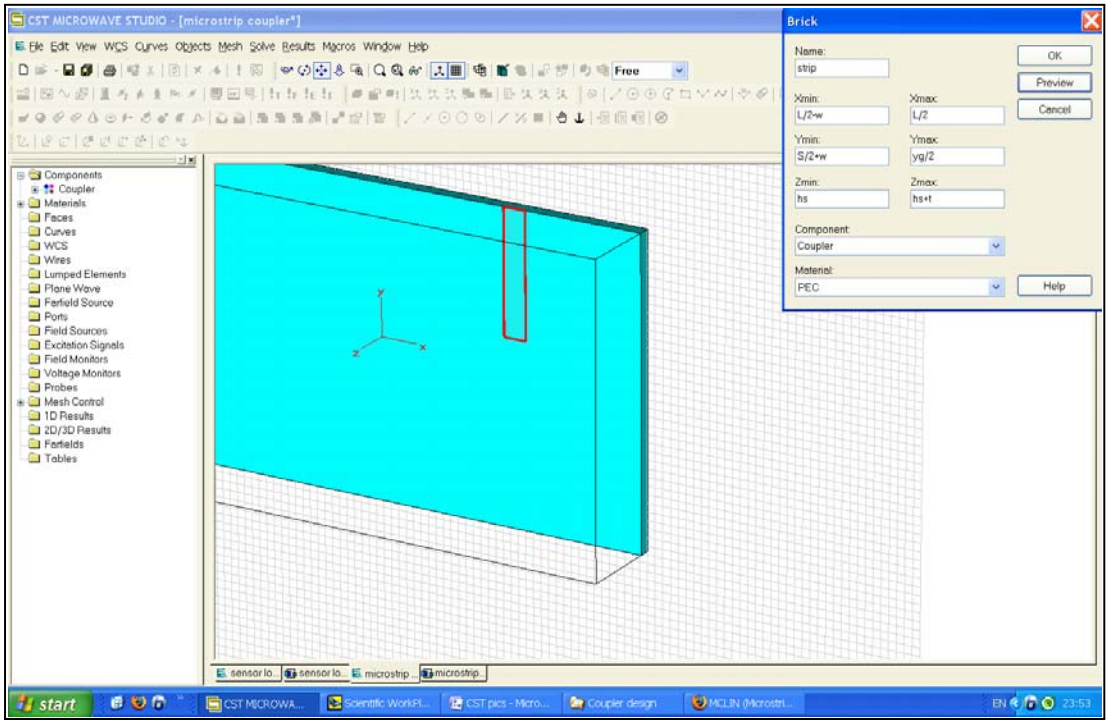

Figure 3 - Defining the first strip.

5. Zoom in to the end of the strip, as shown in Figure 4.

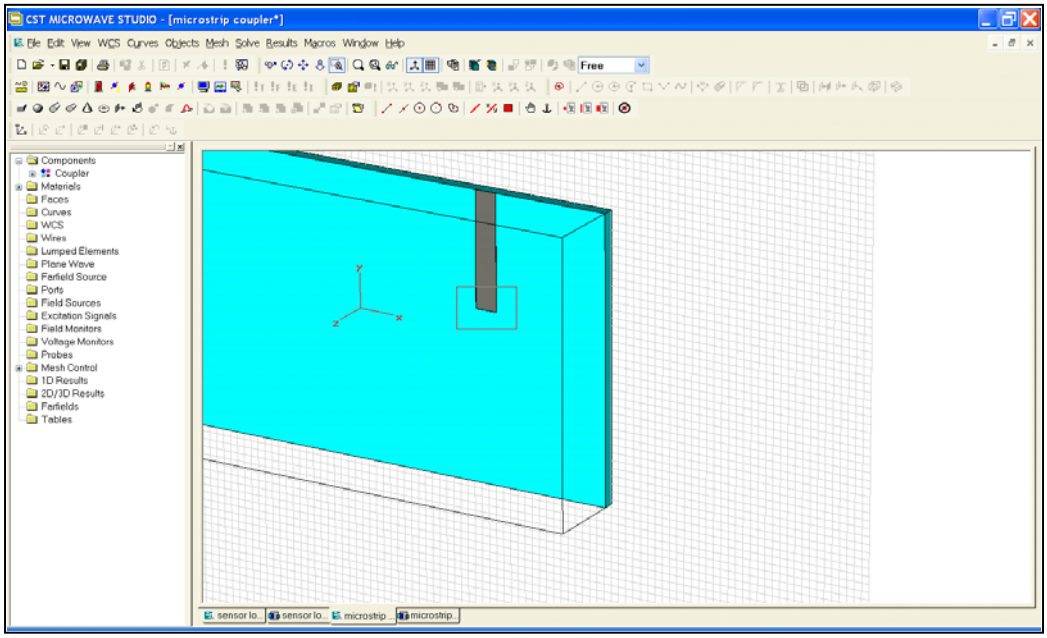

Figure 4 - Zooming in to the end of the strip.

6. Pick the face of the end of the strip, as shown in Figure 5.

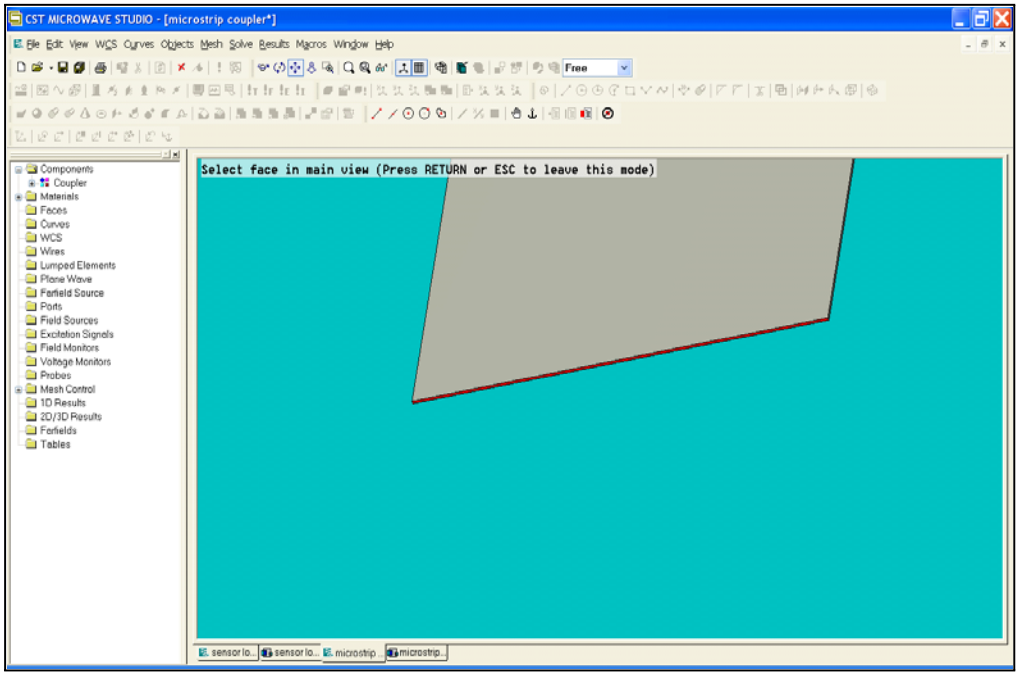

Figure 5 - Picking the face of the end of the strip.

7. Choose 'Rotate', press 'ESC' and then define a rotation axis numerically, as shown in Figure 6.

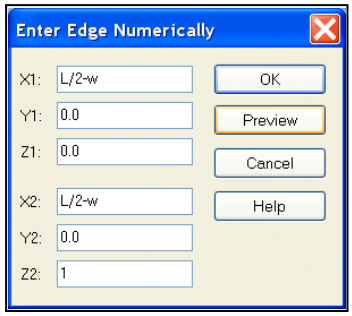

Figure 6 - Coordinations of rotation axis.

8. Choose 'Rotate' again and define the curved edge of the line, as shown in Figure 7.

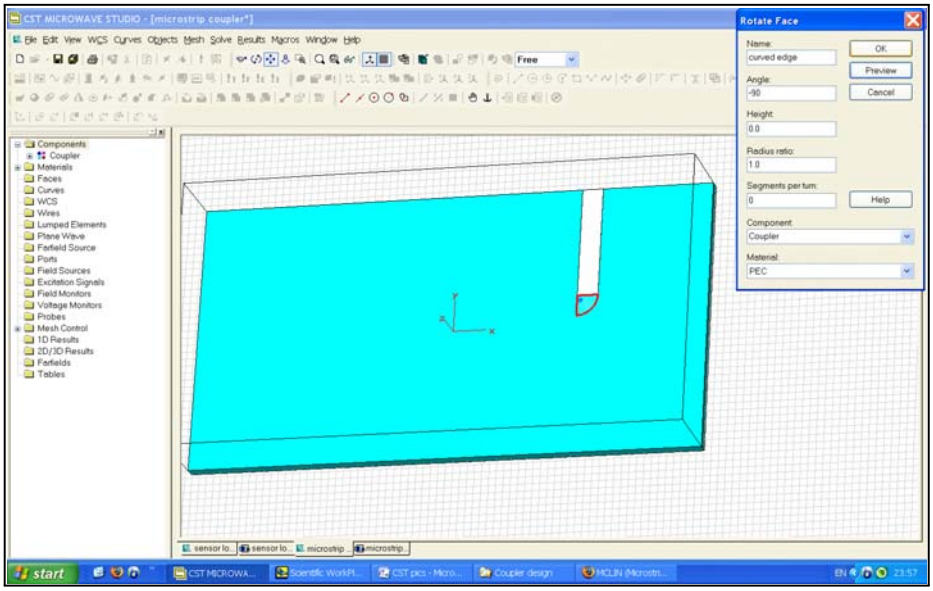

Figure 7 - Defining the curved edge of the line.

9. Add another strip, as shown in Figure 8.

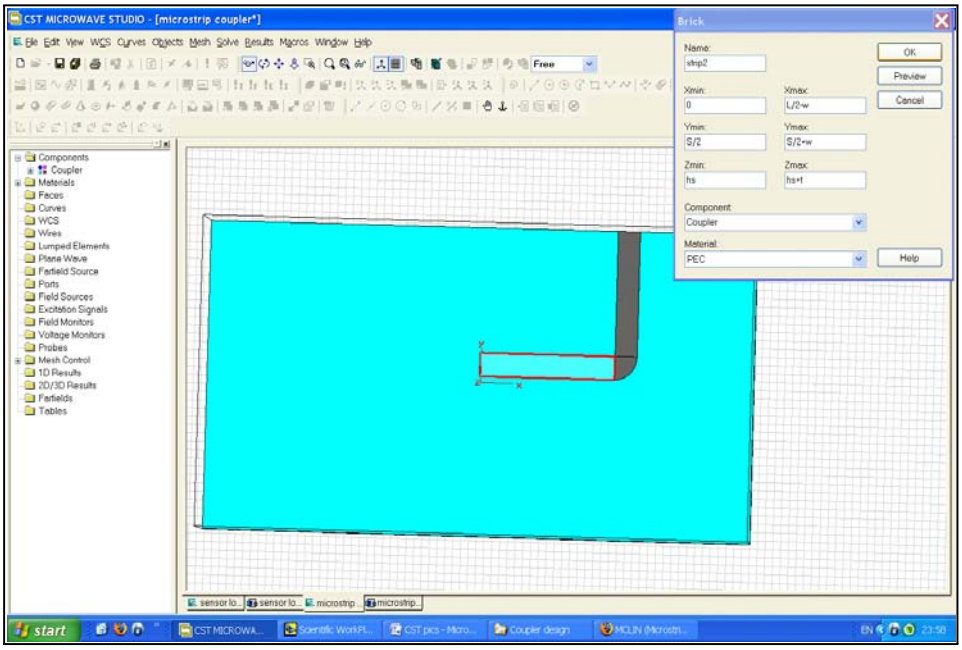

Figure 8 - Adding another strip.

1. Add the curved edge to the first strip with 'Boolean Add (+)'. Do the same with the additional strip.

2. Transform the total strip, as shown in Figure 9.

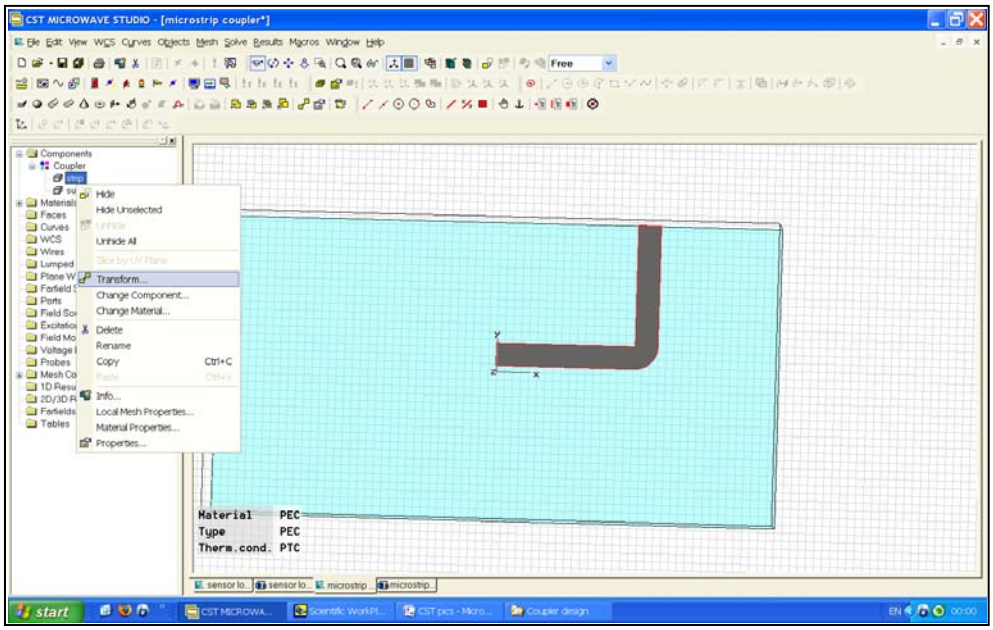

Figure 9 - Transforming the total strip.

3. Mirror it with a mirror plane normal $(1, 0, 0)$, as shown in Figure 10.

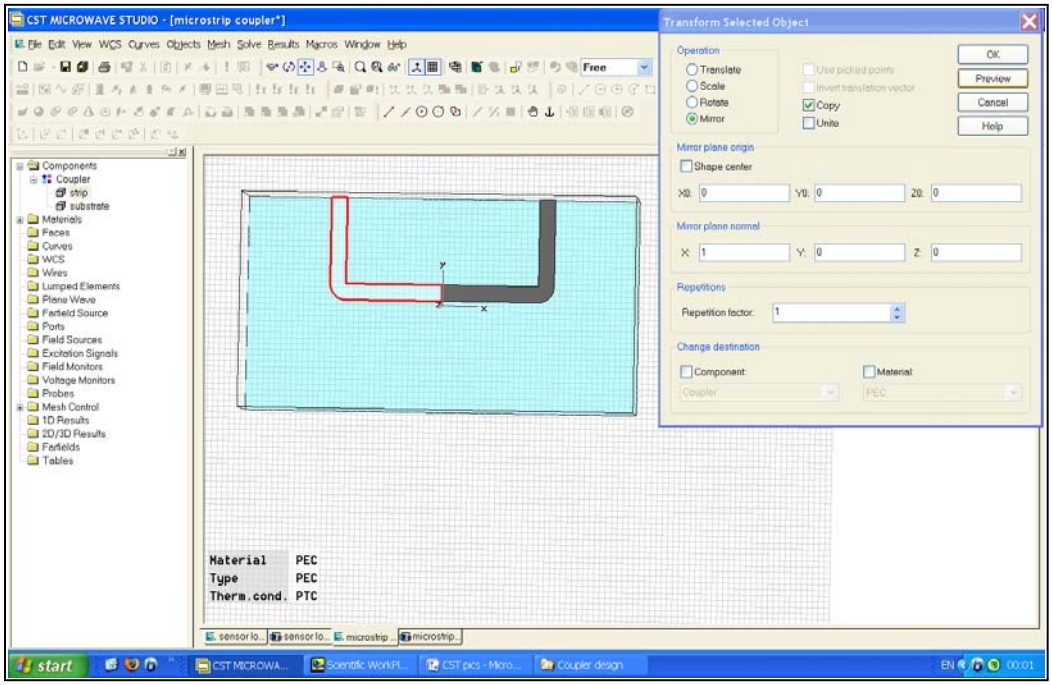

Figure 10 - Mirror the strip.

4. Add the mirrored strip to the original strip.

5. Mirror the new strip with a normal plane normal $(0, 1, 0)$, as shown in Figure 11.

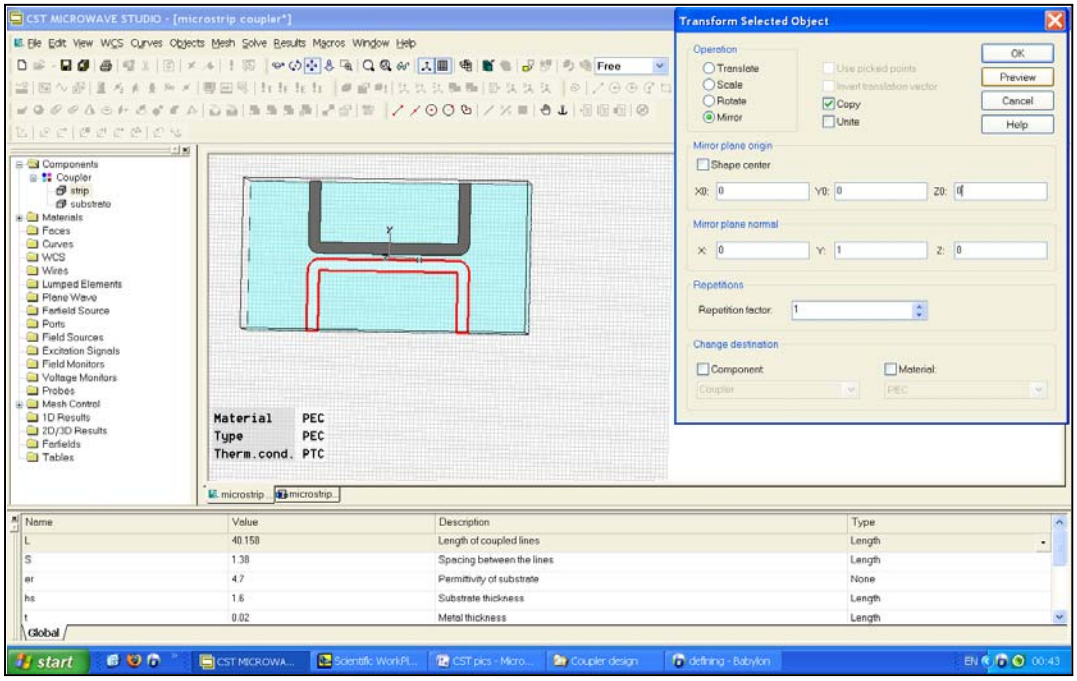

Figure 11 - Mirroring again the strip.

6. Create four waveguide ports at each end of a strip line to perform the S-parameters calculation. An example of the first port location definition is shown in Figure 12.

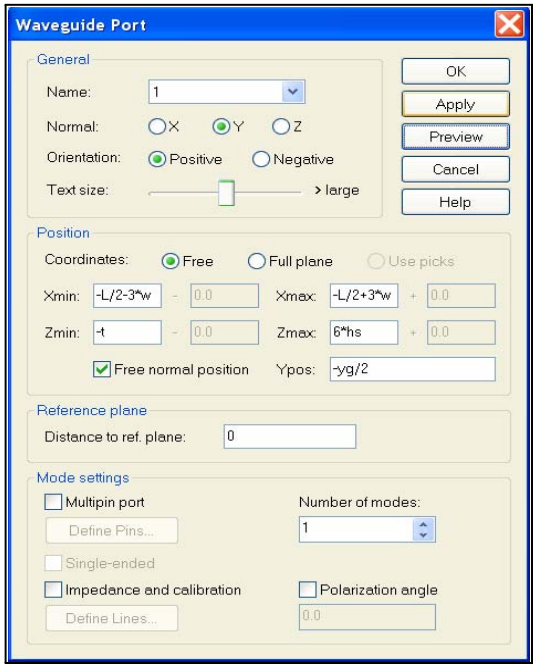

Figure 12 - The first port location definition.

7. Set the frequency range's upper and lower limit to 0.6 GHz and 1.4 GHz, respectively.
8. Run a simulation using the 'Transient solver'.
9. View the S-parameters results. **Save the data.**

   The S-parameters should look as in Figure 13.

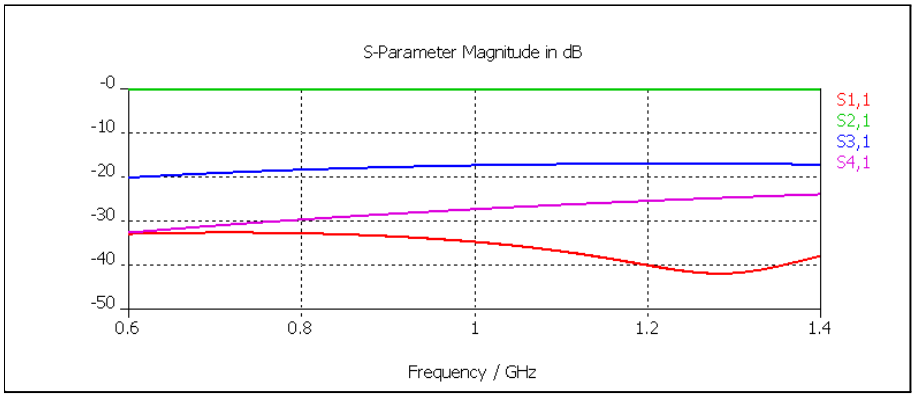

Figure 13 - S parameters of the Coupler.

4.2.3 Calculating the Even and Odd Modes Characteristic Impedances Using CST

In this section you will calculate the even and odd mode characteristic impedances of microstrip coupled lines using a CST model of them. For this purpose, you will use one port adjusted for multipins.

CST calculate the line impedance as the division of the power to the sum of the currents heading into the structure square:

$$Z = \frac{Power}{(\sum Currents_{in})^2}$$

The power is given as the integral of the Poynting vector over the port area and the currents are calculated by integrating the magnetic field in a small distance around the conductors' surfaces.

This impedance expression above differs from the commonly used definition: $Z = \frac{V}{I}$, and thus may lead to different results. For even mode the impedance will be $Z \approx \frac{1}{2} \cdot \frac{V}{I}$, and for odd mode it will be $Z \approx 2 \cdot \frac{V}{I}$.

1. Start a new project, with the same template as before.

2. Define the parameters, as shown in Table 2.

Name	***Value***	***Description***
xg	L	Ground x dimension
yg	(S+2*w)*3	Ground y dimension
t	0.02	Metal thickness
hs	1.6	Substrate thickness
er	4.7	Permittivity of substrate
w		Width of strip
S		Spacing between the lines
L		Length of coupled lines

Table 2 - Parameters Definition

For the missing values, use the dimensions you found in 'Prelab Exercise' question 2 (the value of L is not important).

3. Construct the ground and the substrate as described in the previous section. Construct 2 strips on top of the substrate with the width of

w, the separation of S and the length of L. Figure 14 display the lines.

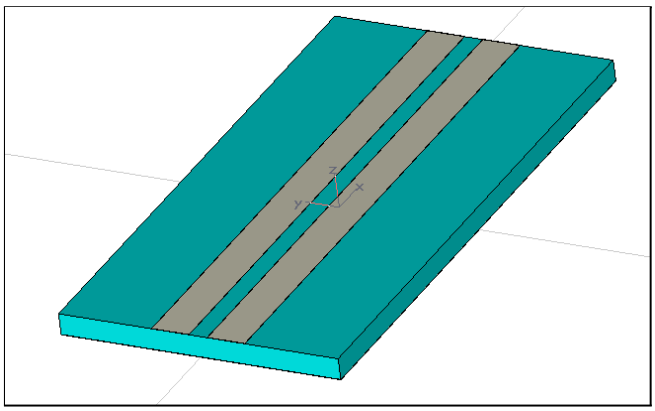

Figure 14 - Model of 2 microstrip coupled lines.

4. Define a waveguide port and check the multipin box in the 'Mode setting', as shown in Figure 15.

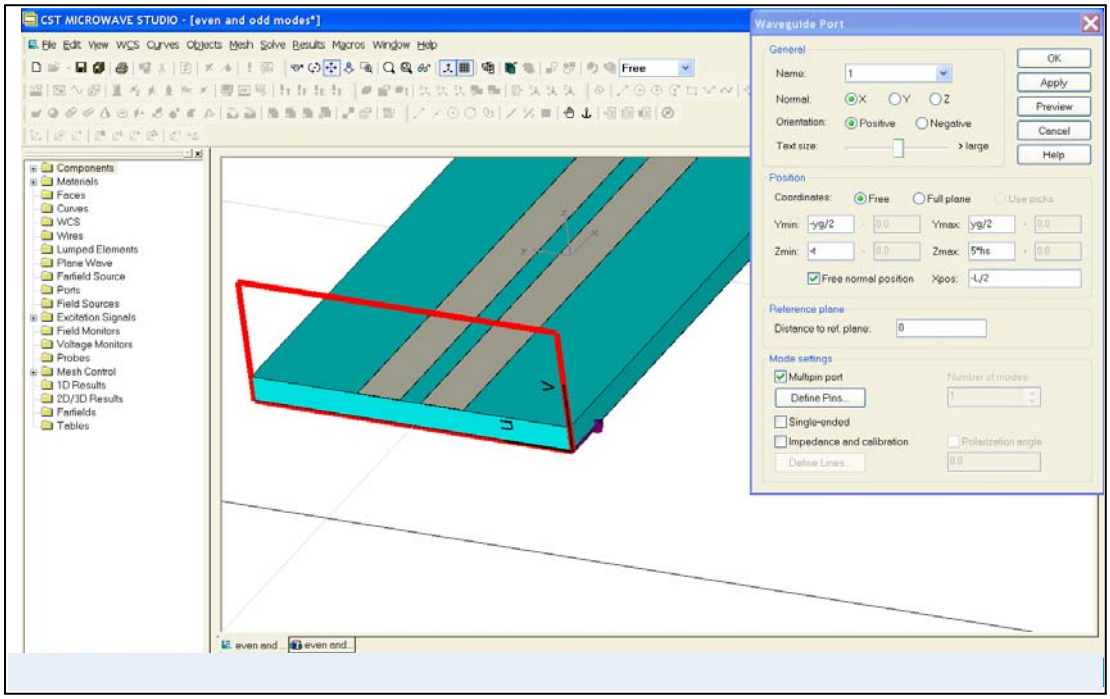

Figure 15 - Defining the multipin port.

Press on the 'Define Pins...' button and define potentials by pressing 'Add...'. Choose the number of the mode as '1', the potential as 'Positive' and the location as 'Picked', as shown in Figure 16.

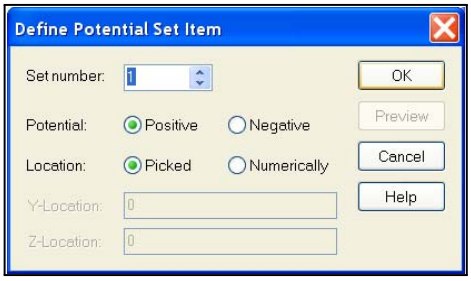

Figure 16 - Defining a potential.

Press 'OK' and select one of the planar port faces. Add another potential, also positive and pick the other port face. Figure 17 shows the potentials definition for even mode.

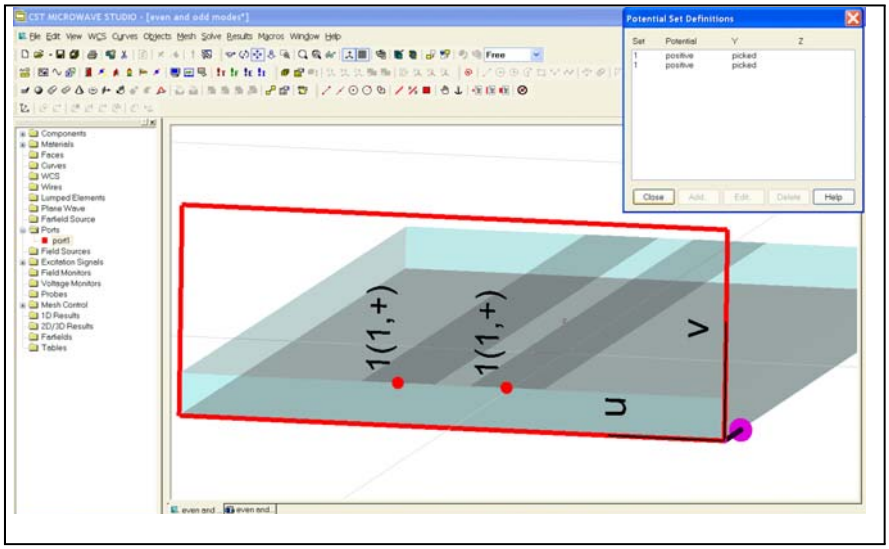

Figure 17 - Even mode definition.

5. After the port definition, press with the right key of the mouse on 'port1' from the 'Ports' folder from the navigation tree and tree 'Info..',

as shown in Figure 18.

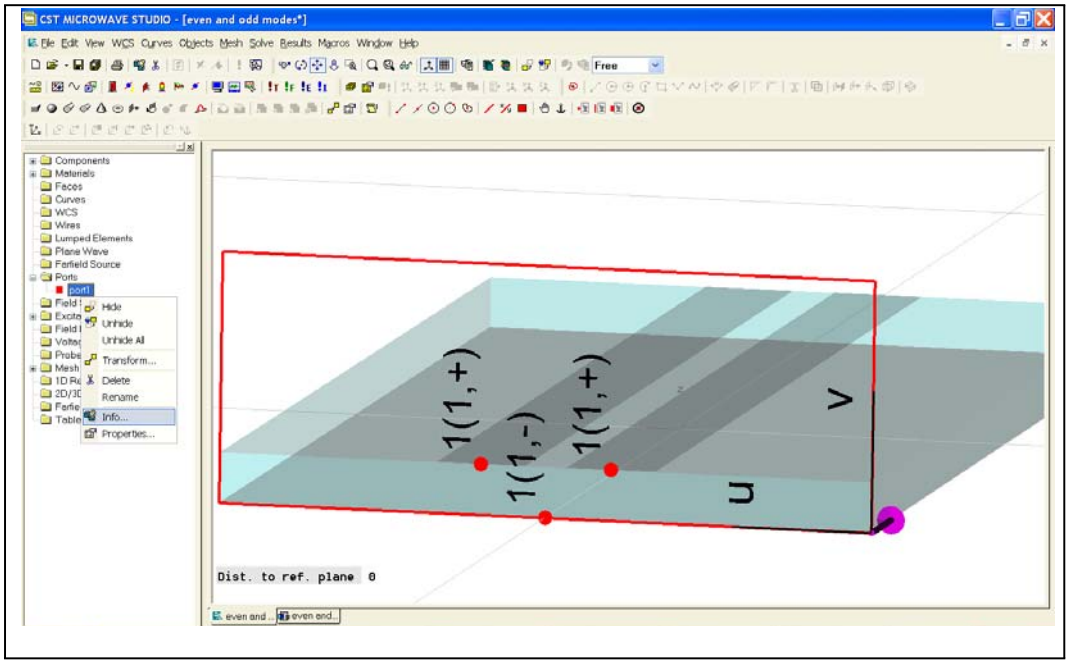

Figure 18 - Port information.

Calculate the port parameters for frequency of 1 GHz. 'Zline' is the line impedance and thus is the even mode characteristic impedance.

6. Delete the port and define a new port with the same dimension as before. Now, define only two potentials, as shown in Figure 19.

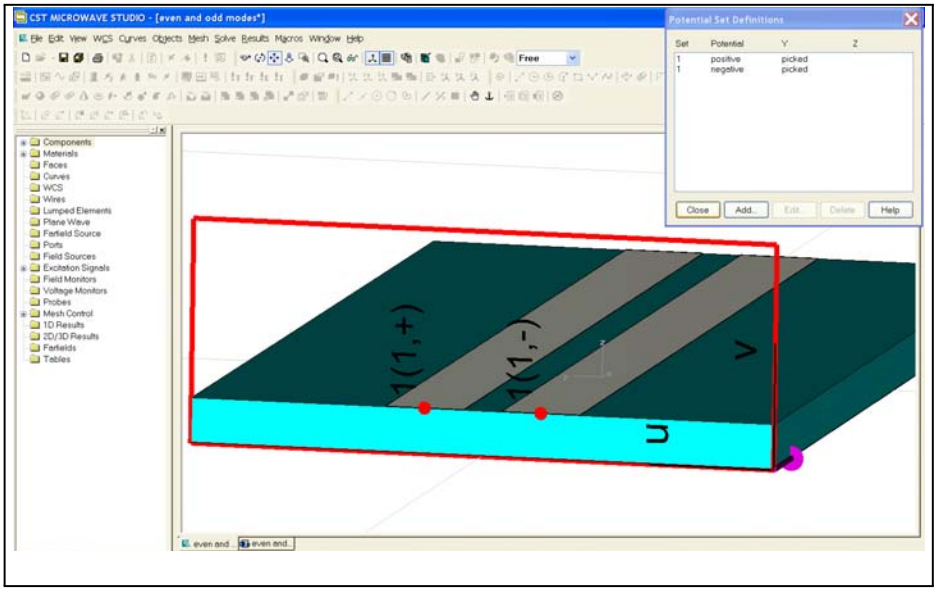

Figure 19 - Odd mode definition.

7. Calculate the line impedance again.

8. Compare the CST results to the calculated ones.

4.2.4 Measurement

1. Measure the following S parameters : Input VSWR S_{11}, output VSWR S_{22}, Coupling S_{41}, Directivity $S_{31}-S_{41}$.**Save the data on magnetic media.**

4.3 Multi - Section Edge Coupled Line Coupler

4.3.1 ADS Simulation

1. Simulate a single section edge coupled line with the dimensions you found in 'Prelab Exercise' question 3, as shown in Figure 20.

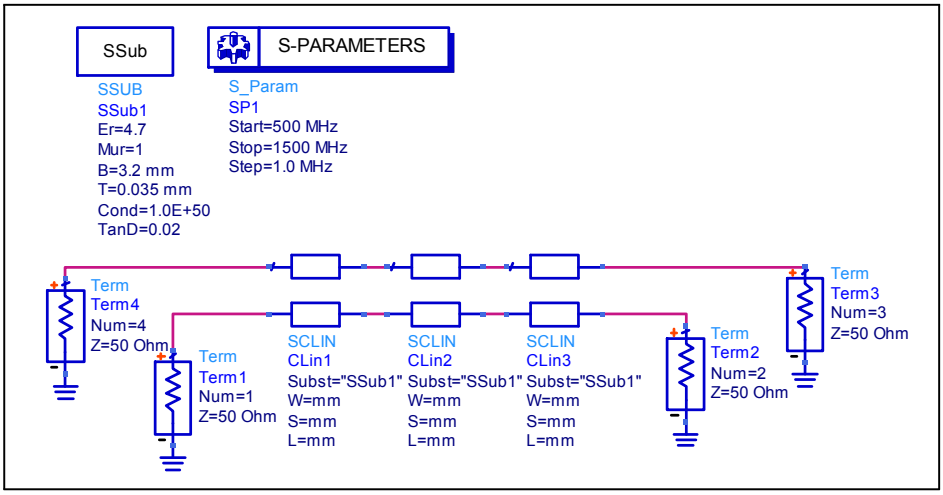

Figure 20 - Three section edge coupled lines coupler.

4. Draw the following graphs:

- Coupling (dB).
- Directivity (dB).
- Insertion Loss (dB).
- VSWR primary and secondary line.
- Frequency sensitivity (primary line) in the frequency range 800 $MHz-$ 1200 MHz.

  Save the data on magnetic media.

4.3.2 Measurement

1. Measure the following S parameters : Input VSWR S_{11} , output VSWR S_{22},Coupling S_{41} and Directivity $S_{31}-S_{41}$.**Save the data on magnetic media.**

4.4 Final Report Requirements

1. Attach all simulation and measurements results.

2. Design a three section coupled lines coupler with a Coupling of 20 dB, center frequency 1 GHz and characteristic impedance of 50 Ω,substrate $FR4$ with $\epsilon_r = 4.2$ in a stripline with a ground plane. Find the width, separation and the length of each section.

Using MATLAB, draw the graphs of the coupling and the directivity of the coupler in the frequency range 500 MHz - 1500 MHz.

3. Write a MATLAB program that plots the performance of a resistor-divider non-directional coupler as a function of R_2. Assume $Z_0 = R_1 = 50\Omega$. The parameters to be calculated are:

- Insertion loss.
- Input return loss.
- Coupling.
- Sample port return loss.

References

[1] "Microwave Engineering" David M. Pozar.